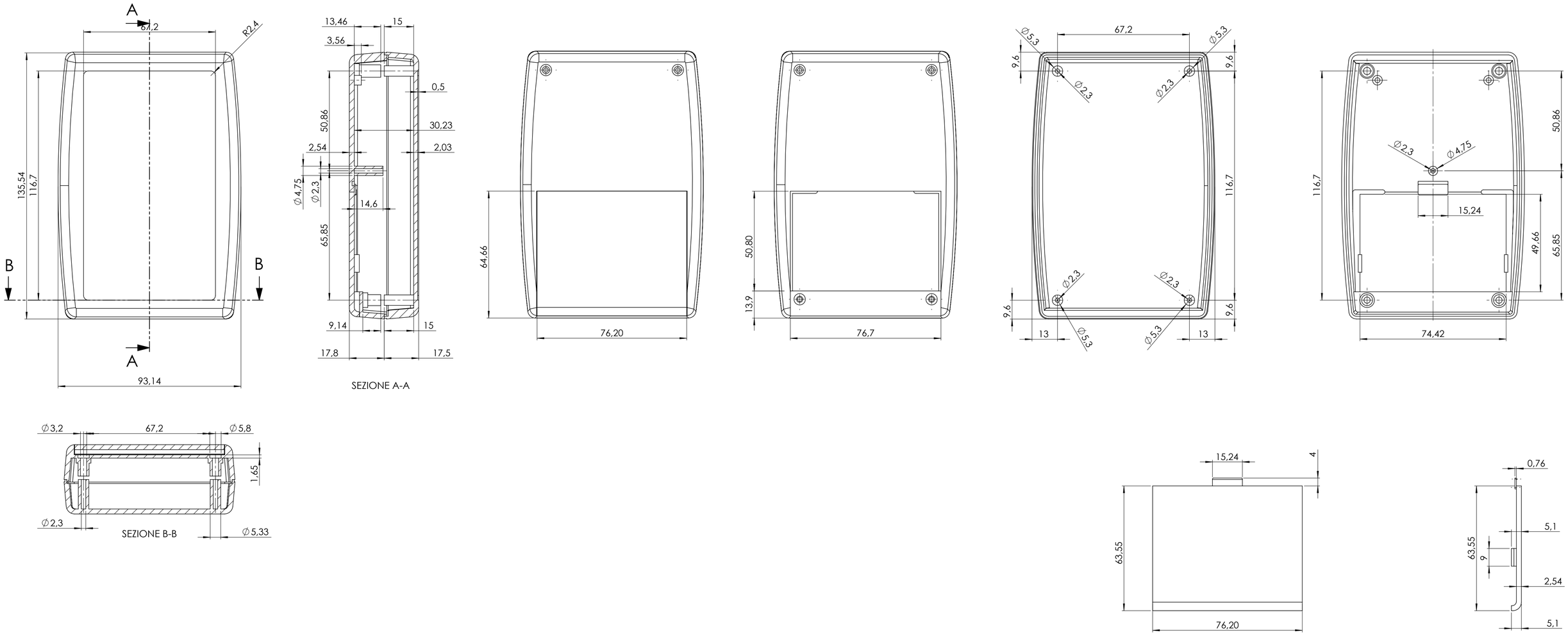

Proprietary and Confidential

TEKO S.p.A. Via dell'Industria 5 - S.Lazzaro di Savena - BO - IT

Subject to technical modification without prior notice.
Tipographical and others errors do not justify any claim for damages.
All dimensions should be verified using an actual moulded part.

Part Number:	Date:	Sheet:	First angle prj.
HYXL-B	25/08/2017	**1 of 1**	

TEKO® ENCLOSURES

*This document contains proprietary information of **TEKO S.p.a.** and is tendered subject to the conditions that the information be retained in confidence not be reproduced or copied and not be used or incorporated in any product.*

Size:	Scale:
A1	**1:1**